aTIP® By Biotix

PRODUCT SPECIFICATION SHEET

VB-0030-3SC

VB-0030-3FC

Description	Agilent™ Velocity 11® 30 Tip	Agilent™ Velocity 11® 30 Filter Tip
Biotix Part #	**VB-0030-3SC**	**VB-0030-3FC**
Maximum Volume	30 µl	15 µl
Graduation Marks	Yes	Yes
Certified Pre-Sterile and Free of Key Contaminants	Yes	Yes
Material	Clear polypropylene	Clear polypropylene
Packaging	384 tips per rack, 10 racks per pack, 5 packs per case	384 tips per rack, 10 racks per pack, 5 packs per case
Plate Compatibility	96 & 384	96 & 384
X-Resin™	Yes	Yes
Statix™	Yes	Yes
Blade™	Yes	Yes
Delta Filter™	No	Yes
Technical Drawings	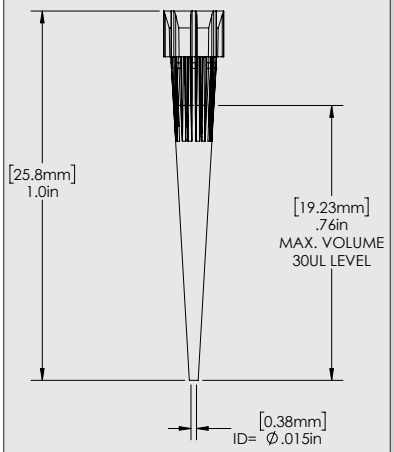	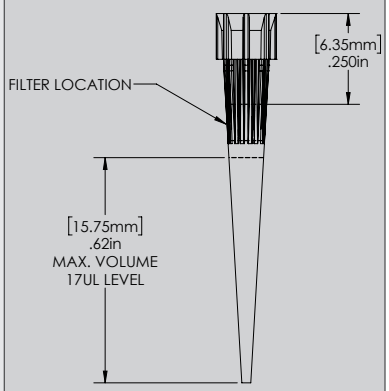

Quality Testing

RNase/DNase	Products are washed in distilled water and concentrated via centrifugation. Samples are added to previously established nucleic acid standards, incubated for one hour at 37°C, and tested on a 2% gel using electrophoresis. Products must show no degradation of standards to pass. Test sensitivity is 10^{-7} Kunitz units/µl.
Nucleic Acid	Products are washed in distilled water and concentrated via centrifugation. Then, samples are added to protocol specified PCR reactions and thermal cycled for 50 cycles. A 2% agarose gel electrophoresis is used to examine experimental samples, positive controls, and negative controls. To pass, product samples must show no DNA amplification. Test sensitivity is 10 ng.
Endotoxin/Pyrogen	Products are tested for endotoxins by using the Limulus Amebocyte Lysate (LAL) gel assay according to FDA guidelines. Test sensitivity is 0.06 EU/ml.
Trace Metal	Products are washed in distilled water. The sample is then tested using reflectometry using a single strip test for the following metals: Ca, Cu, Fe, K, Mg, Mn and Ni. Standard solutions are used as positive controls. A reader is used to detect metals to a sensitivity of 500 mg/L.
PCR Inhibitor	Products are tested via PCR amplification and gel electrophoresis analysis. Samples must show normal amplification to be considered free of PCR inhibitors.
Sterilization	Products are sterilized using electron beam irradiation.
CV Test	Each lot of Biotix product is CV tested and the resulting CV is then printed on the pack label. The volume tested is equal to the maximum volume per tip size.
TIR-Total Indicated Runout	Biotix pipette tips are tested to ensure that they meet the SBS standards. Individual products specify their compatibility with 96, 384 or 1536-well plates.

Proprietary Technologies

Statix	Static reduction and prevention technology Patents Pending
X-Resin	Proprietary resin, virgin polypropylene
Delta Filter	Color change filter Patents Pending
Blade	Minimal distal end orifice Patents Pending

Pipettor Compatibility:

Agilent™ Velocity 11® VPrep® with 384 head
Agilent™ Velocity 11® Bravo® with 384 head

©2012, Biotix, Inc. All rights reserved
Biotix, Fluid Innovation, Delta Filter, X-Resin, Blade, FlexFit, Statix, Leave Nothing Behind, BioReady, Tip Eject, and XTreme Quality are registered trademarks or trademarks of Biotix, Inc. All other brands and names contained herein are the property of their respective owners.